20.1.3 Exercises - Ampere's Force 3

1. Two long straight parallel wires P and Q carry currents into the plane of the paper, as shown in Fig.

The current in P is I and the current in Q is $2I$.

a.

i. On Fig., draw an arrow to show the direction of the magnetic field at wire Q due to the current in wire P. Label this arrow B. [1]

ii. On Fig., draw another arrow to show the direction of the force acting on wire Q due to the current in wire P. Label this arrow F. [1]

b.

i. State, with a reason, how the magnitude of the force acting on wire P compares with the magnitude of the force acting on wire Q.

.....

.....[2]

ii. State how the direction of the force on wire P compares with the direction of the force on wire Q.

.....[1]

2. A horseshoe magnet is placed on a balance. A stiff metal wire is clamped horizontally between the poles, as illustrated in Fig.

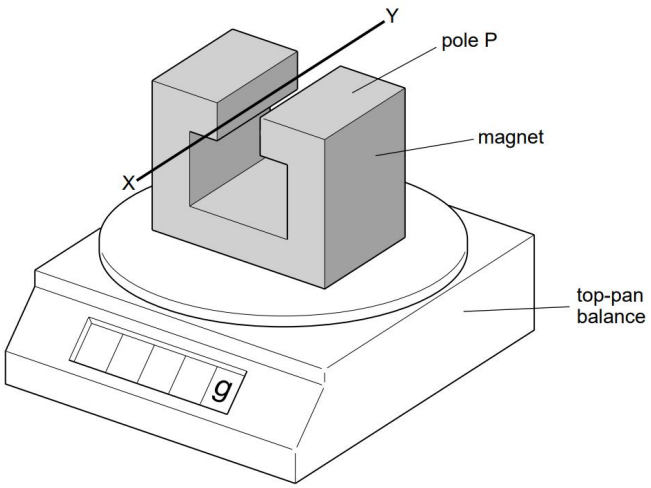

The magnetic flux density in the space between the poles of the magnet is uniform and is zero outside this region.

The length of the metal wire normal to the magnetic field is 6.4 cm.

When a current in the wire is switched on, the reading on the balance increases by 2.4 g. The current in the wire is 5.6 A.

a. State and explain the direction of the force on the wire due to the current.

.....

.....

..... [3]

b. State the polarity of the pole P of the magnet.

..... [1]

c. Calculate the magnitude of the magnetic flux density between the poles of the magnet.

flux density = ... T [2]

3. A stiff copper wire is balanced horizontally on a pivot, as shown in Fig.

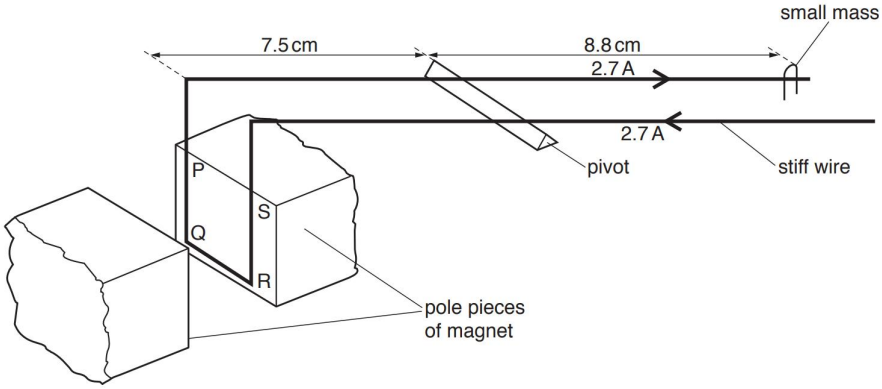

Sections PQ, QR and RS of the wire are situated in a uniform magnetic field of flux density B produced between the poles of a permanent magnet.

The perpendicular distance of PQRS from the pivot is 7.5cm.

When a current of 2.7A is passed through the wire, a small mass of 45mg is placed a distance 8.8cm from the pivot in order to restore the balance of the wire, as shown in Fig.

a. Explain why, when the current is switched on, the current in the sections PQ and RS of the wire does not affect the balance of the wire.

.....

..... [2]

b. The length of section QR of the wire is 1.2cm. Calculate the magnetic flux density B.

B = ... T [3]